SPECIFICATION SHEET

COLLECTION: VIBE PROFESSIONAL
PRODUCT CODE: CUC-1061-C/P

DESCRIPTION:
Vibe Professional
mono kitchen mixer
deck mounted
with swivel spout
with two function pull-out spout
cold ceramic cartridge C-502-RTC
hot ceramic cartridge C-502-LTC
deck mount drill hole diameter 35mm
minimum operating pressure 1.0 bar MP

FINISH:
Chrome

FLOW REGULATOR:
FR-100/5-PLA

MINIMUM OPERATING PRESSURE:
1.0 bar MP

FLOW RATE AT 3.0 BAR FLOW PRESSURE:
Aerator: 10, Spray:11 l/min

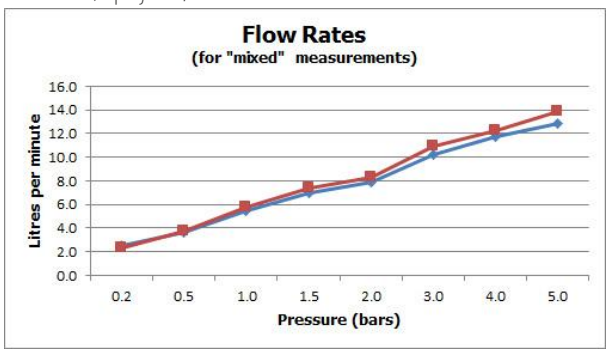

15 year guarantee

tel: 01934 744466
email: sales@vado.com
www.vado.com

where inspiration flows
taps | showering | accessories

VADO

TECHNICAL DRAWING

COLLECTION: VIBE PROFESSIONAL
PRODUCT CODE: CUC-1061-C/P

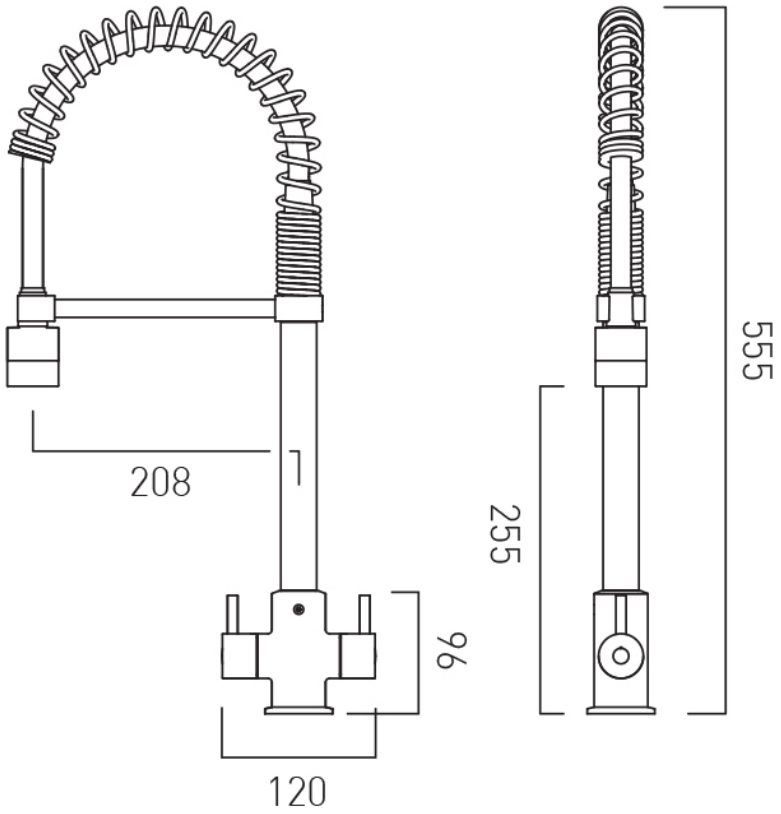

tel: 01934 744466
email: sales@vado.com
www.vado.com

where inspiration flows
taps | showering | accessories

VADO