where inspiration flows
taps | showering | accessories

technical sheet
product code: KOV-150-C/P

technical drawing:

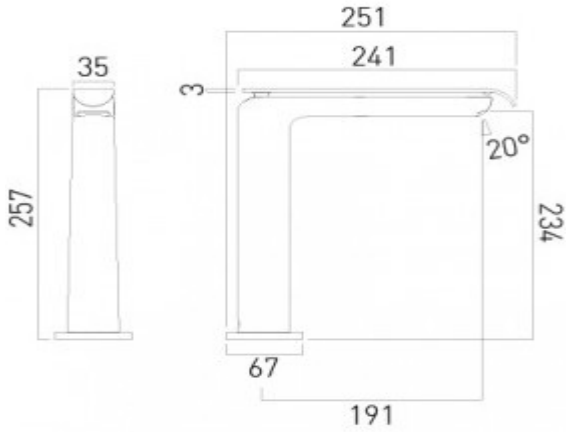

description: kovera
mono sink mixer
single lever
deck mounted
with swivel spout
ceramic cartrige ST-231L/25-CAR
deck hole drill diameter 35mm

finishes: chrome

guarantee: 12 year guarantee

minimum operating pressure: 0.2 bar LP

flow rate at 3.0 bar flow pressure: 8 l/min

certificates and awards:

WRAS APPROVED PRODUCT

cert no. 1707311

VADO wedmore road cheddar somerset england bs27 3eb
tel 01934 744466 fax 01934 744345 sales@vado-uk.com www.vado-uk.com