SPECIFICATION SHEET

COLLECTION: ORIGINS
PRODUCT CODE: ORI-150S-C/P

DESCRIPTION:
mono kitchen mixer
single lever
deck mounted
with swivel spout
with water flow straightener
with water flow aerator
ceramic cartridge CAR-K35B
2 x 1/2" nut x 400mm flexipipe connections
deck mount drill hole diameter 35mm
minimum operating pressure 0.2 bar LP

FINISH:
Chrome

FLOW REGULATOR:
FR-100/5-PLA

MINIMUM OPERATING PRESSURE:
0.2 bar LP

FLOW RATE AT 3.0 BAR FLOW PRESSURE:
Aerator: 14, Flow st: 22 l/min

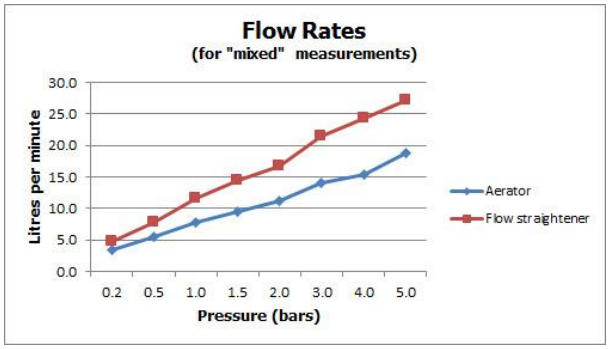

15 year guarantee

tel: 01934 744466
email: sales@vado.com
www.vado.com

where inspiration flows
taps | showering | accessories

VADO

TECHNICAL DRAWING

COLLECTION: ORIGINS
PRODUCT CODE: ORI-150S-C/P

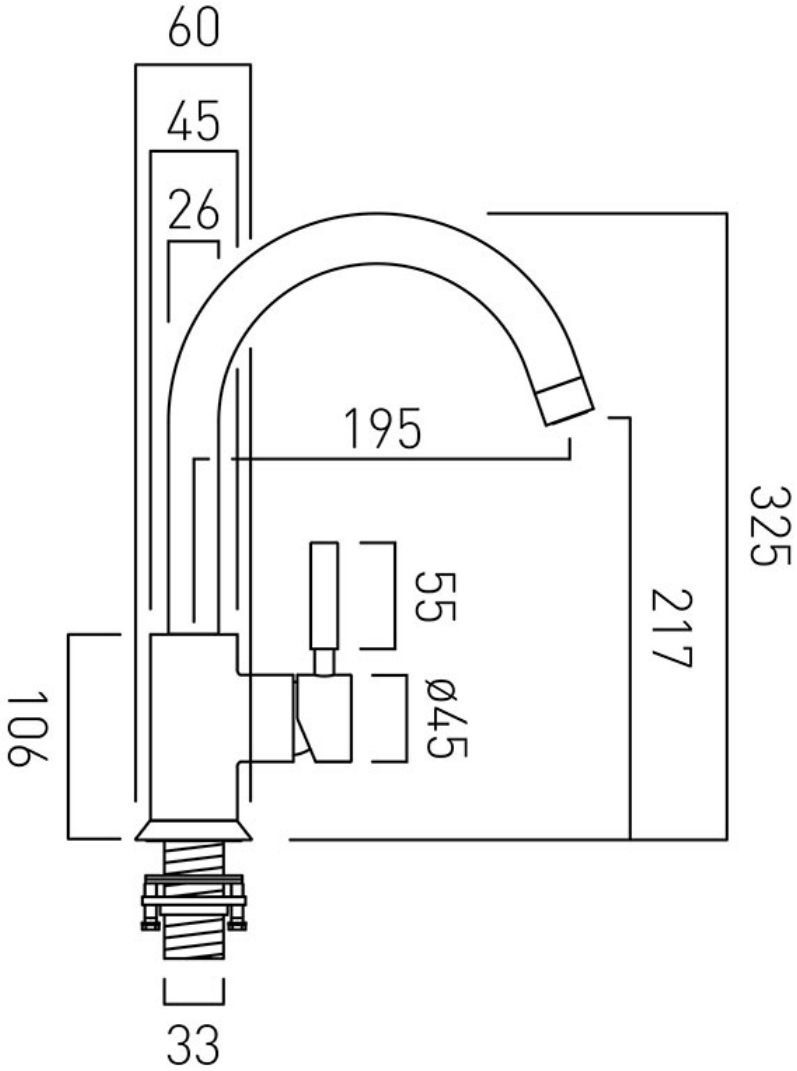

tel: 01934 744466
email: sales@vado.com
www.vado.com

where inspiration flows
taps | showering | accessories

VADO